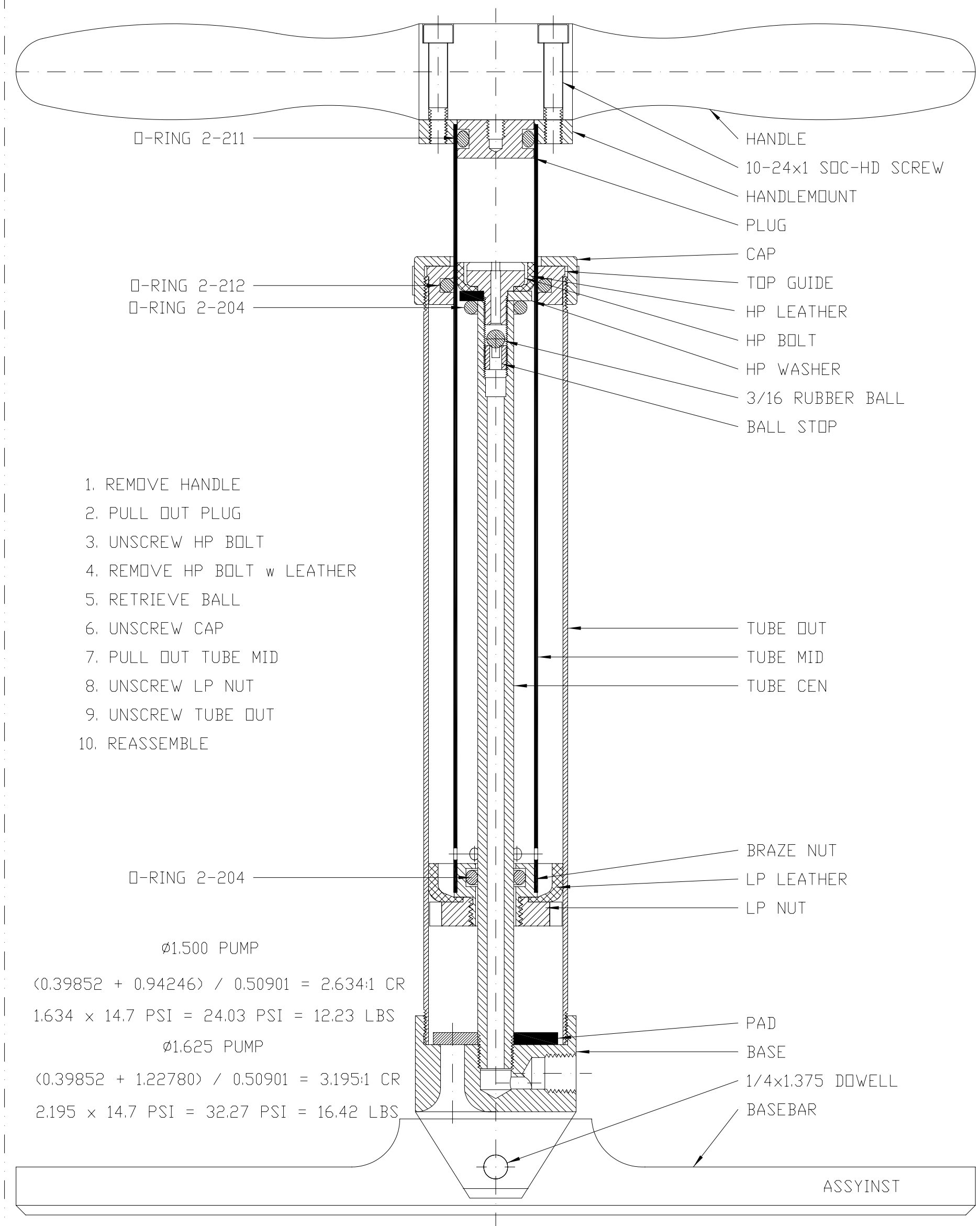
O-RING 2-211
HANDLE
10-24x1 SOC-HD SCREW
HANDLEMOUNT
PLUG
CAP
O-RING 2-212
O-RING 2-204
TOP GUIDE
HP LEATHER
HP BOLT
HP WASHER
3/16 RUBBER BALL
BALL STOP
1. REMOVE HANDLE
2. PULL OUT PLUG
3. UNSCREW HP BOLT
4. REMOVE HP BOLT w LEATHER
5. RETRIEVE BALL
6. UNSCREW CAP
7. PULL OUT TUBE MID
8. UNSCREW LP NUT
9. UNSCREW TUBE OUT
10. REASSEMBLE
TUBE OUT
TUBE MID
TUBE CEN
BRAZE NUT
O-RING 2-204
LP LEATHER
LP NUT
ø1.500 PUMP
(0.39852 + 0.94246) / 0.50901 = 2.634:1 CR
1.634 x 14.7 PSI = 24.03 PSI = 12.23 LBS
ø1.625 PUMP
(0.39852 + 1.22780) / 0.50901 = 3.195:1 CR
2.195 x 14.7 PSI = 32.27 PSI = 16.42 LBS
PAD
BASE
1/4x1.375 DOWELL
BASEBAR
ASSYINST