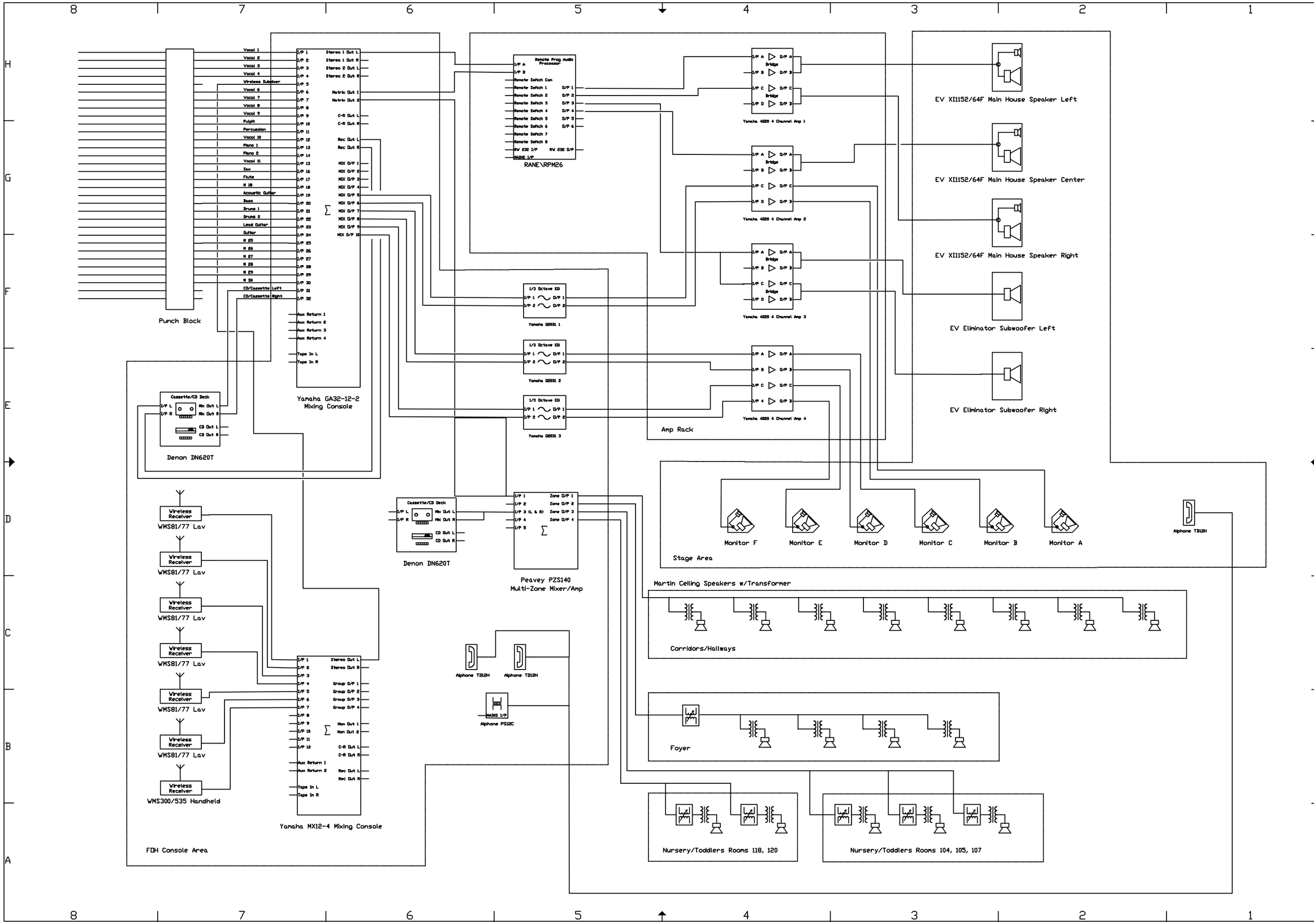

Rev.No. | Note | Date | Signature | Checked

JHAR Engineering

523 Cartwright Way - Greenbrier, TN 37073 - Tel. 615-301-1828

Owner/Client

Your Church
Anywhere, USA

Date
Scale N.T.S.
File
Designed By JHAR
Drawn By Jin Hall
Checked By
Approved By Date
Reference

Title

Audio System
Block Diagram
Main Sanctuary

Sheet
Drawing No.

SS1.0