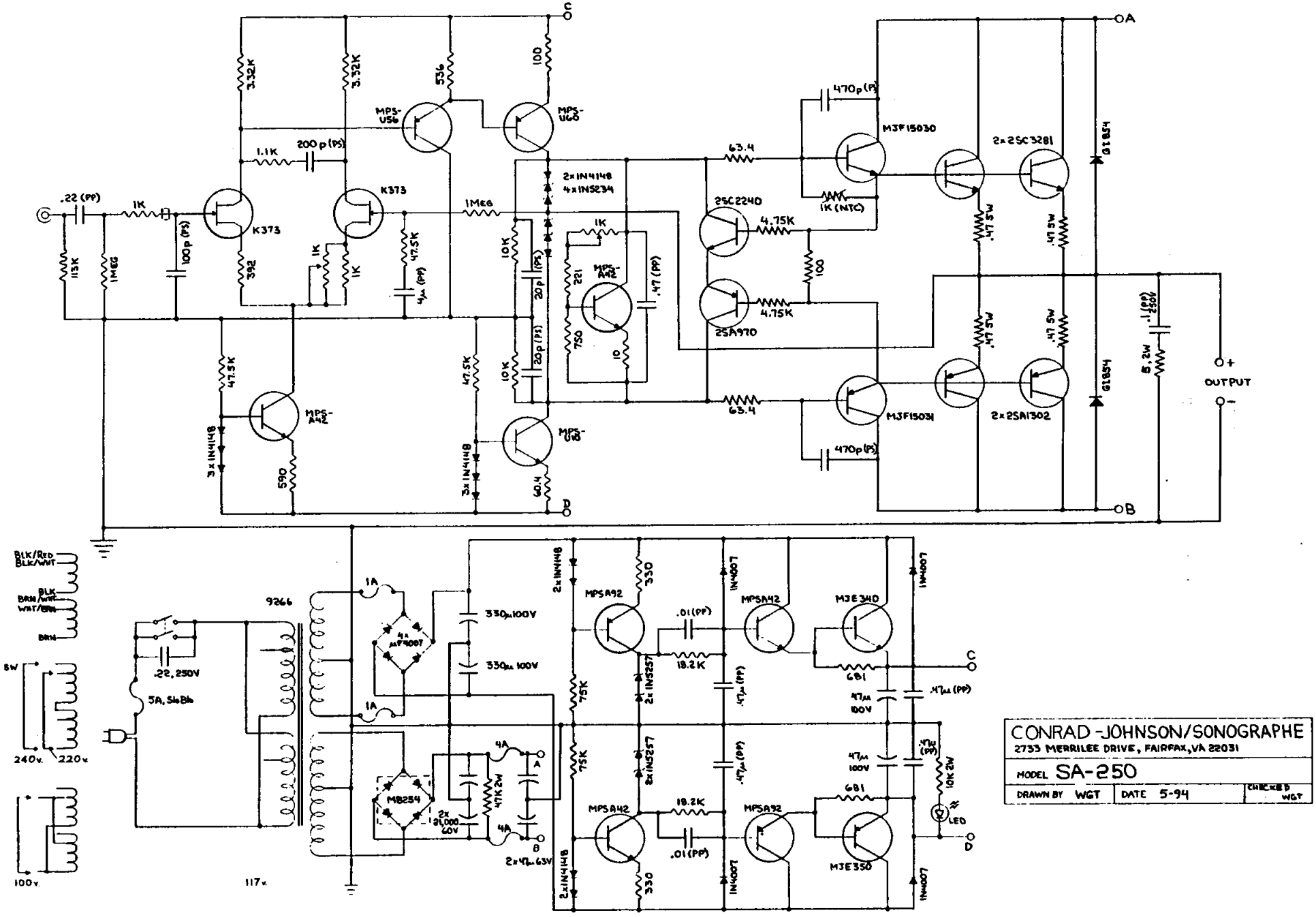
CONRAD-JOHNSON/SONOGRAPHE
2733 MERRILEE DRIVE, FAIRFAX, VA 22031
MODEL SA-250
DRAWN BY WGT
DATE 5-94
CHECKED WGT
OUTPUT
MJF15030
MJF15031
2x2SC3281
2x2SA1302
2SC2240
2SA970
MPSA92
MPSA42
MJE340
MJE350
K373
MPS-U56
MPS-U60
MPS-A42
MPS-U18
MB254
9266
LED
BLK/RED
BLK/WHT
BLK
BRN/WHT
WHT/BRN
BRN
SW
240v.
220v.
100v.
117v.
5A, SlbBk
.22, 250V
330µ 100V
2x 20,000 60V
2x 47µ 63V
10K 2W
1K (NTC)