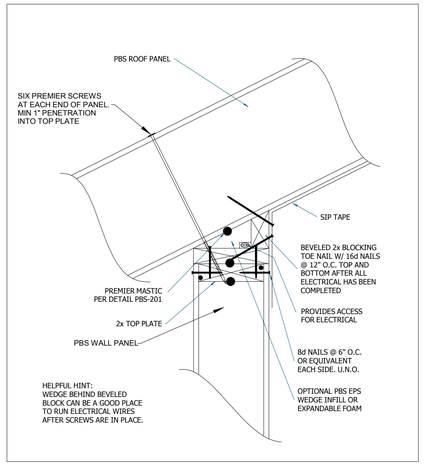

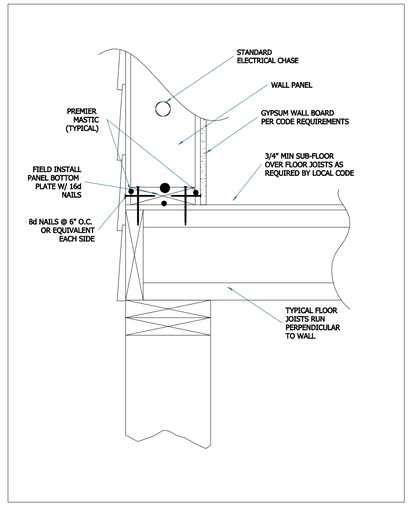

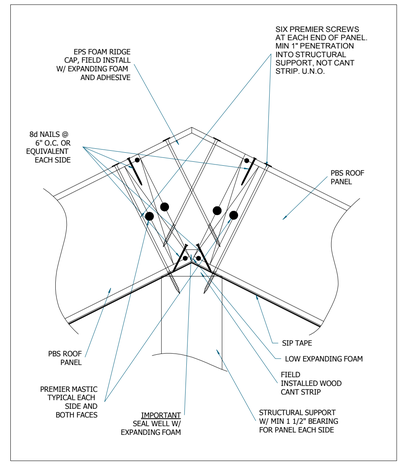

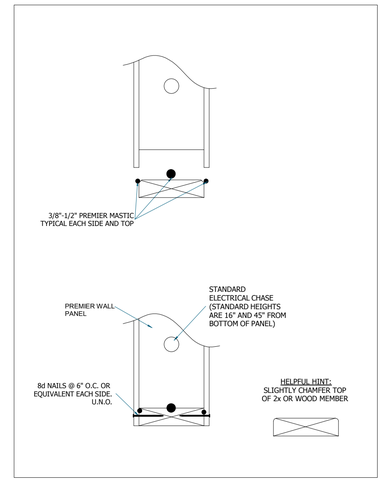

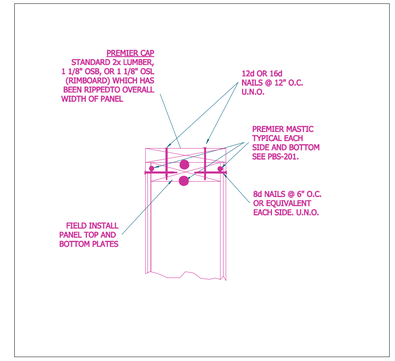

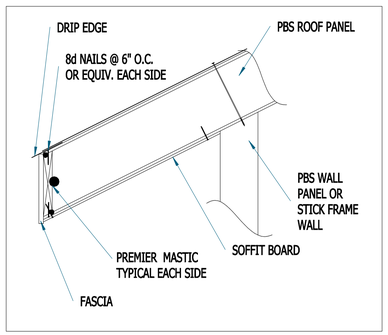

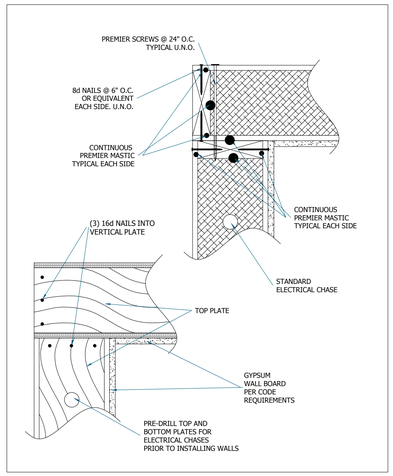

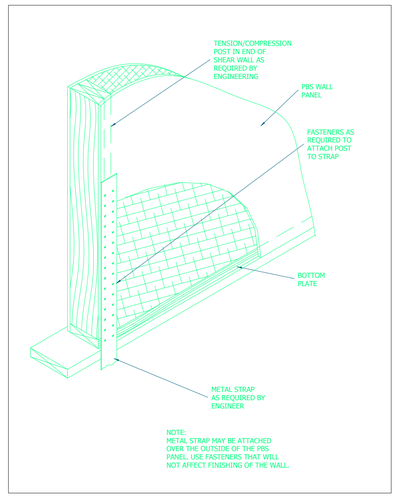

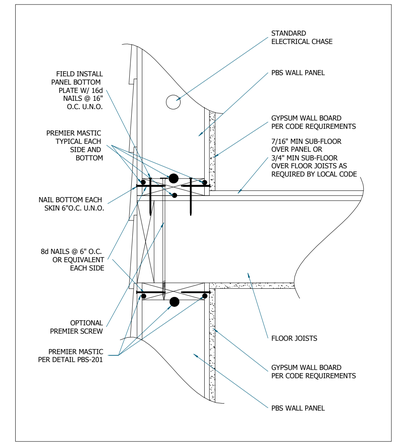

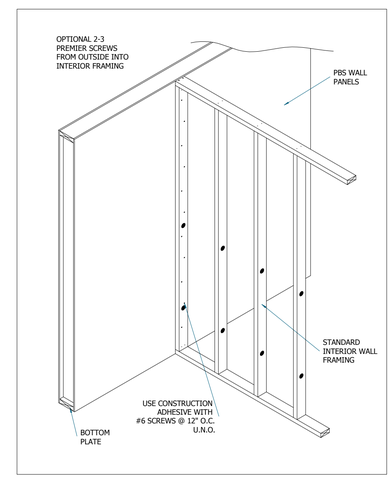

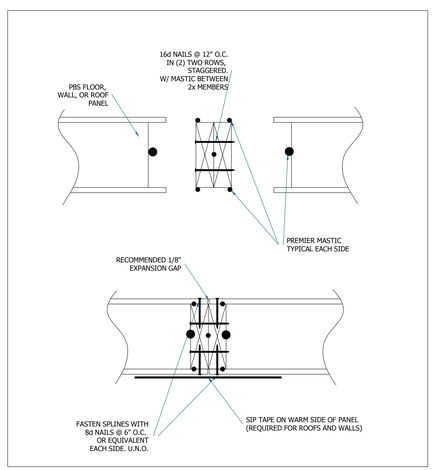

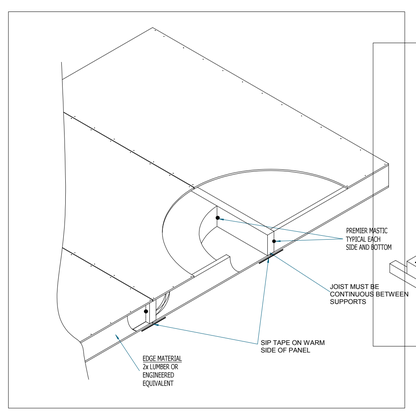

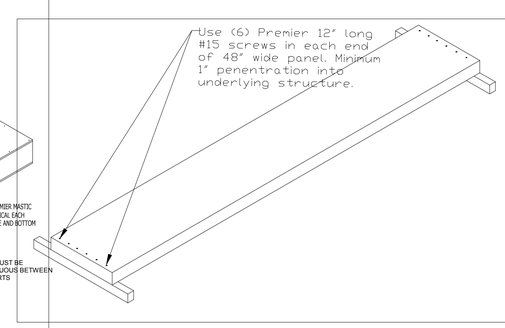

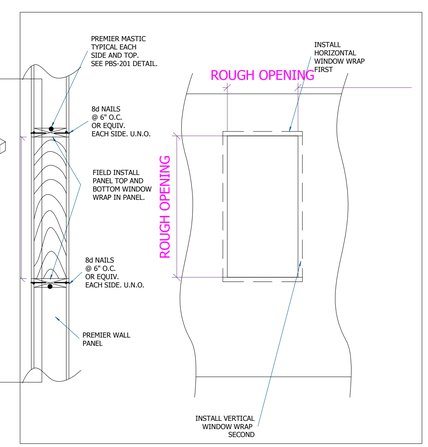

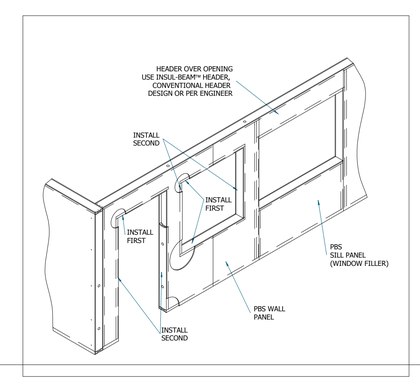

SIPS DETAILS

DATE: 7/23/06	
REVISION:	New

A-10